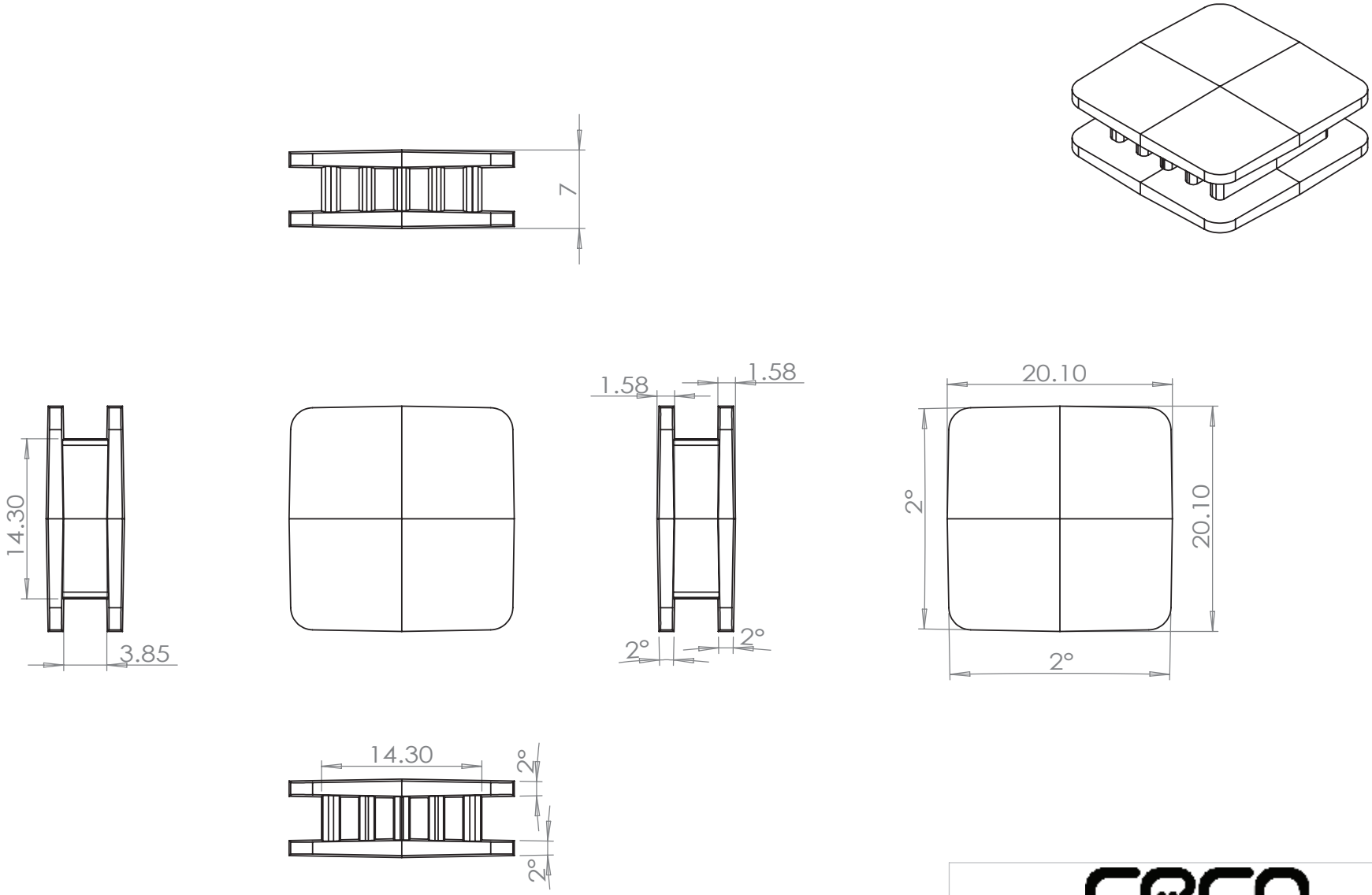

TITLE: Inter Connect			A4
			SHEET 1 OF 1
UNIT: MM	SCALE: 2:1	DATE: 10/10/2014	REVISION: 1.0